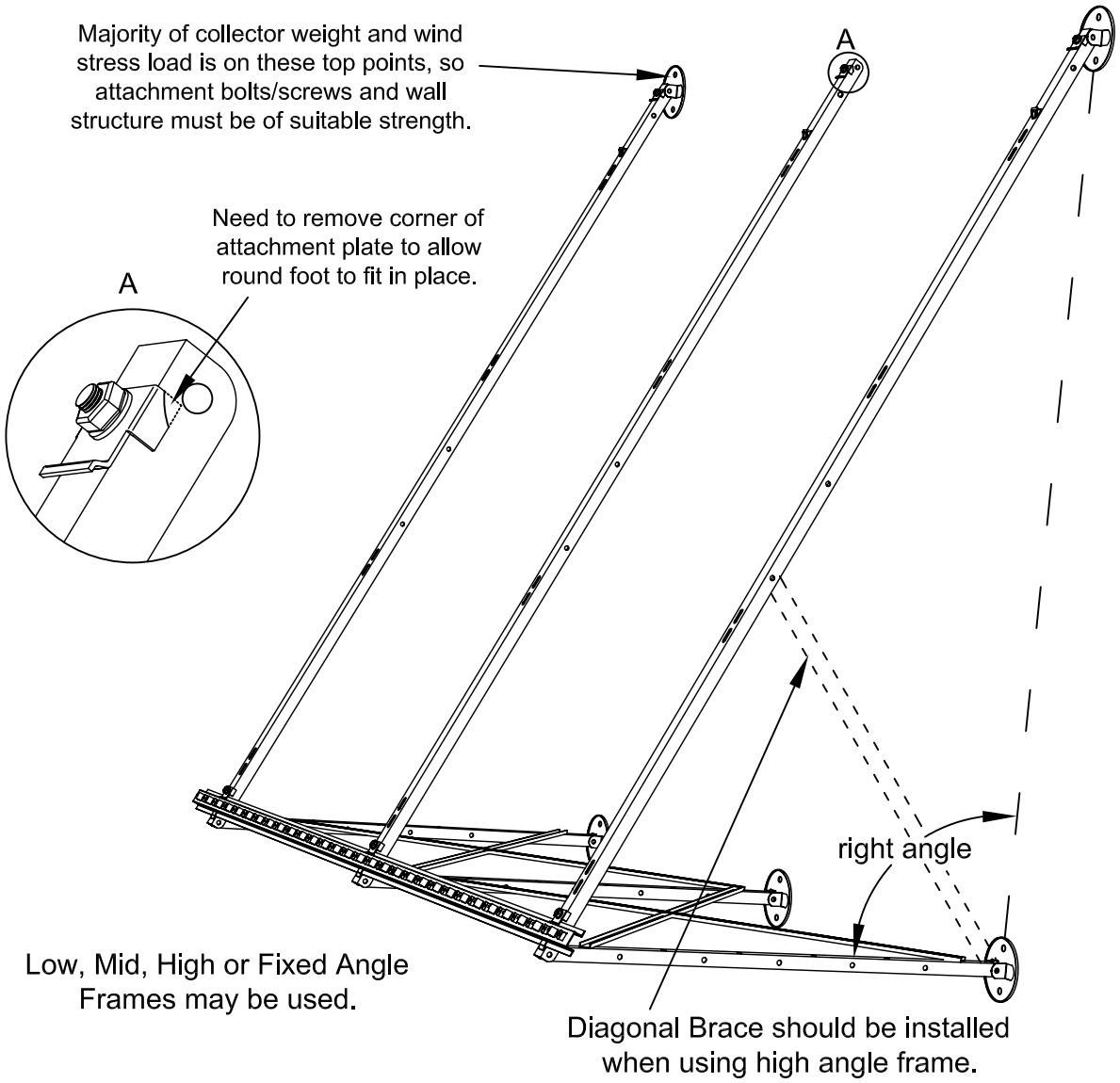Apricus Solar Collector Wall Mounting Diagram